Directional Coupler

Features and Electrical specifications:

Model	CP10-F1511-S/0.5-8GHz
Frequency Range	0.5~8GHz
Insertion Loss	≤±0.7dB (Excluding 0.45dB coupling loss)
Nominal Coupling	10±1dB
Coupling Sensitivity	≤±0.7dB
Directivity	≥18dB
VSWR	1.20 Max
Rated Power	50W
Impedance	50 Ω
Connector Type	SMA-F
Dimension	113x15x11 mm
Surface Finishing	Grey Painting
Operating Temperature	-55 ~ +85°C
ROHS Compliant	Yes

Outline Drawing (Unit: mm):

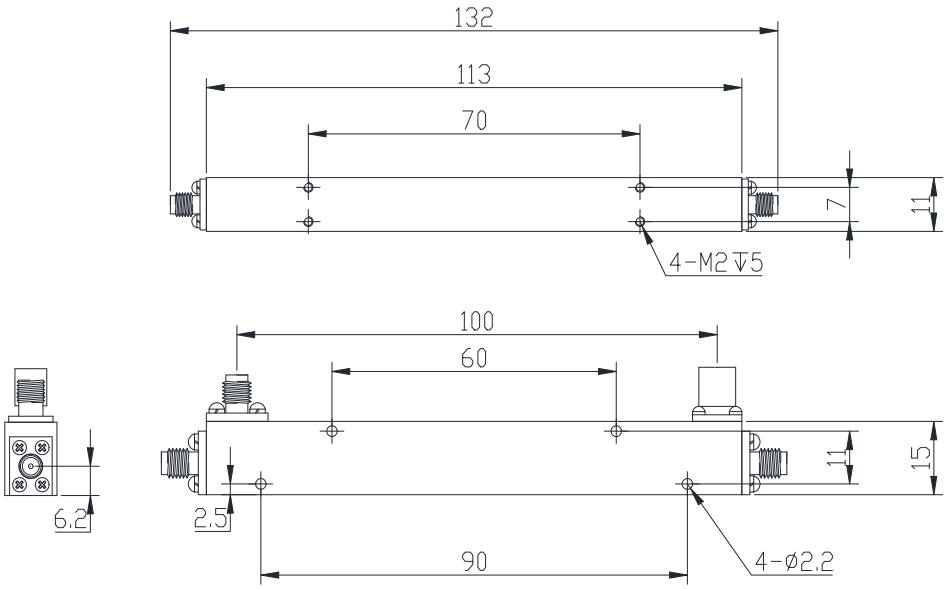

RFTYT Technology Co., LTD.
http://www.rftyt.com
E-mail : jackson@rftyt.com zqc7708@rftyt.com
TEL: +86-13088268828 FAX: +86-816-2846565
218# Wenwu Middle Road, Jinkai District, Mianyang, Sichuan Province China