# Directional Coupler

## Features and Electrical specifications:

| | |
|---|---|
| Model | CP10-F1543-S/2-8GHz |
| Frequency Range | 2~8GHz |
| Insertion Loss | 0.5dB (Excluding 0.45dB coupling loss) |
| Nominal Coupling | 10±1dB |
| Coupling Sensitivity | ≤±1.0dB |
| Directivity | ≥20dB |
| VSWR | 1.20 Max |
| Rated Power | 50W |
| Impedance | 50 Ω |
| Connector Type | SMA-F |
| Dimension | 43x15x11 mm |
| Surface Finishing | Grey Painting |
| Operating Temperature | -55 ~ +85°C |
| ROHS Compliant | Yes |

## Outline Drawing (Unit: mm):

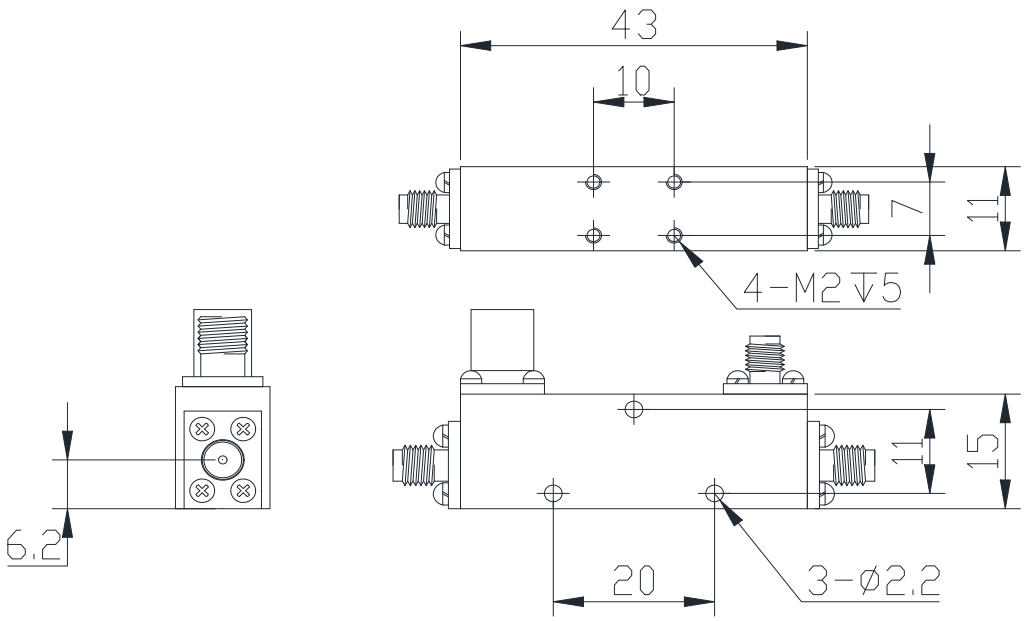


**RFTYT Technology Co., LTD.**
http://www.rftyt.com
E-mail : jackson@rftyt.com zqc7708@rftyt.com
TEL: +86-13088268828 FAX: +86-816-2846565
218# Wenwu Middle Road, Jinkai District, Mianyang, Sichuan Province China